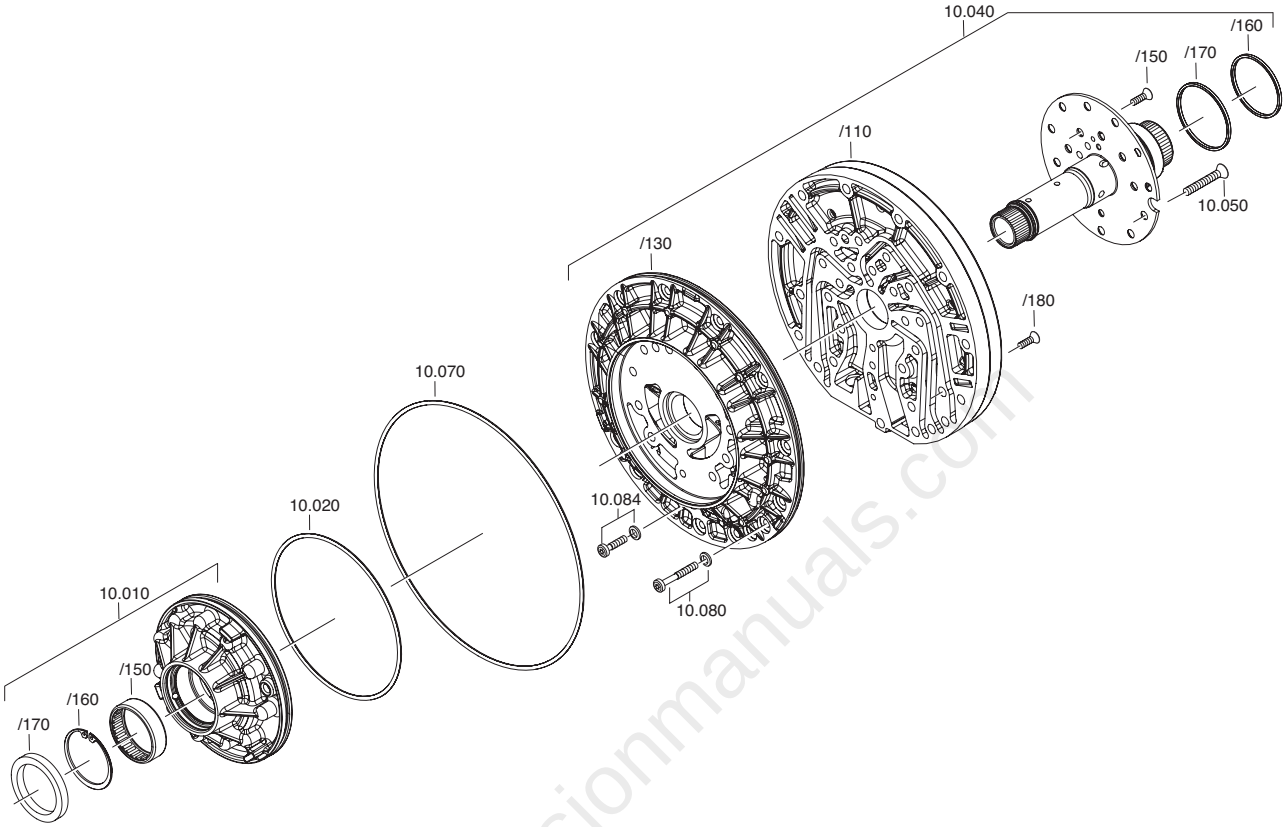

Transmissionmanuals.com

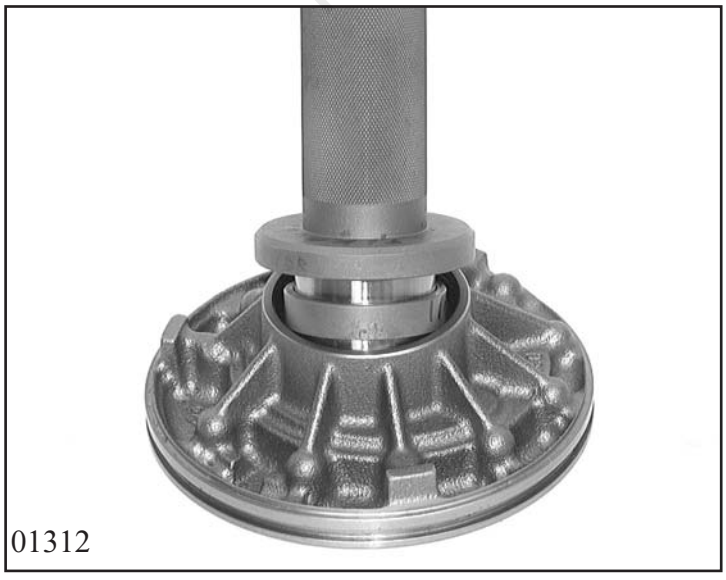

Re-attach all components to pump 10.010.
Press in needle roller bearing 10.010/150 using assembly mandrel 5x46 002 558 (with ring) in the mandrel press and secure with snap ring 10.010/160.

Then fit shaft sealing ring 10.010/170 into the pump housing and press into the pump using assembly mandrel 5x46 002 558 (without ring).



Pull on new O-ring seal 10.020.
Lubricate the pump wheel and internal ring gear lightly before assembly.
Then assemble the pump in such a way that one marking is visible both on the pump wheel and the internal ring gear.

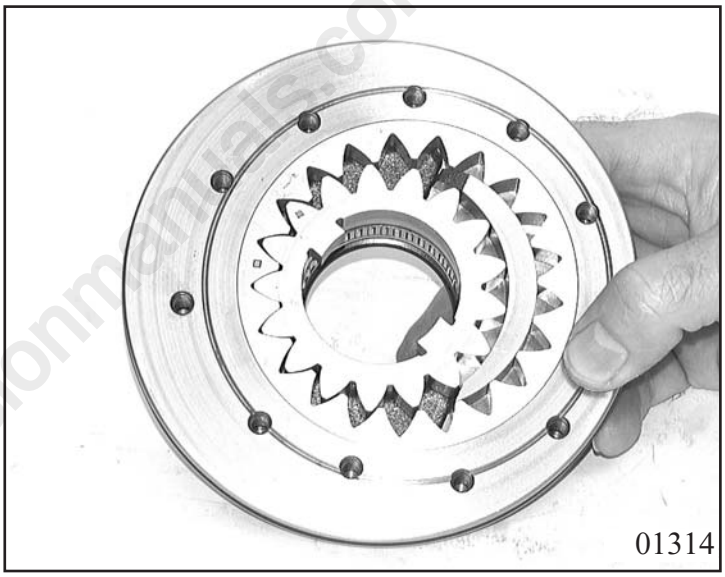

Pull 2 cylindrical rings 10.040/160 + /170 onto the stator shaft 10.040/120.
So that the stator shaft can be mounted on the intermediate plate, these must be positioned towards each other.
Follow the procedure stated on the next page.

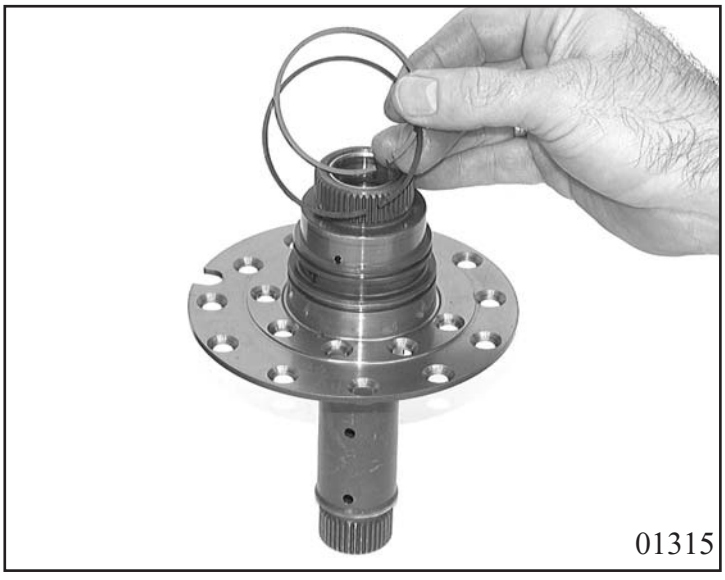

Transmissionmanuals.com



01316

Place intermediate plate 10.040/110 on centering plate 10.040/130 and hold it in position with 4 screws 10.040/180, but without tightening.

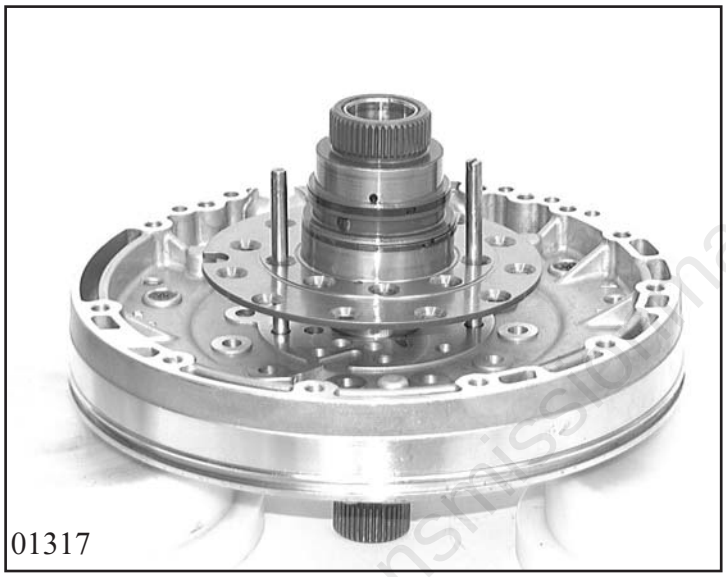

01317

Put the intermediate and centering plates on a supporting fixture and heat up with a hot-air blower to approx. 70 °C.
Screw 2 locating bolts 5x46 001 007 into the centering plate.
Insert the stator shaft over the locating pins and fasten first with countersunk screws 10.040/150.
Remove the locating pins, insert the remaining two countersunk screws and tighten the 4 screws previously screwed in.

(For tightening torque, see Chapter 1.5)

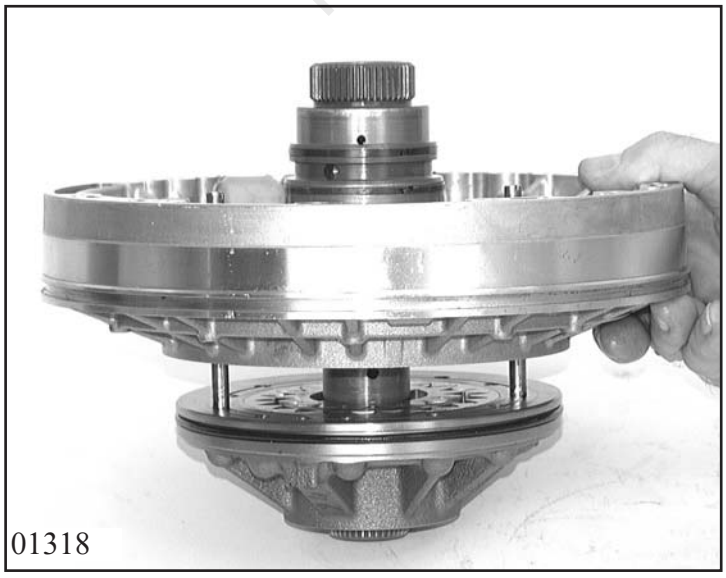

01318

Transmissionmanuals.com

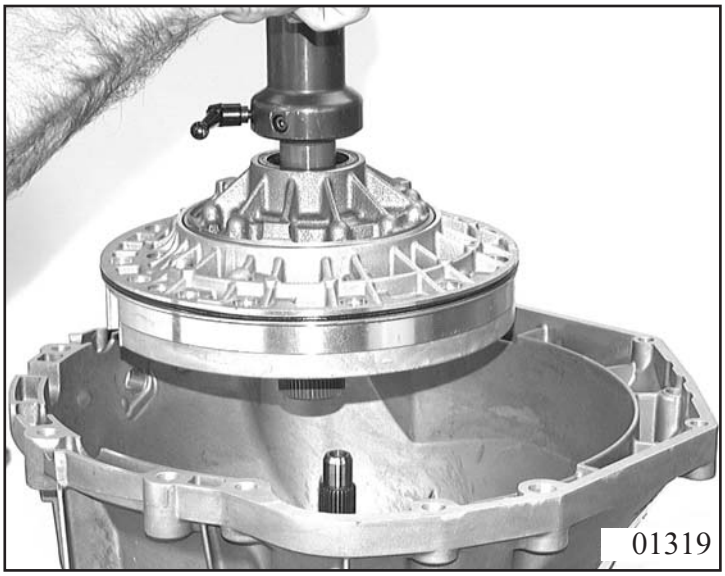

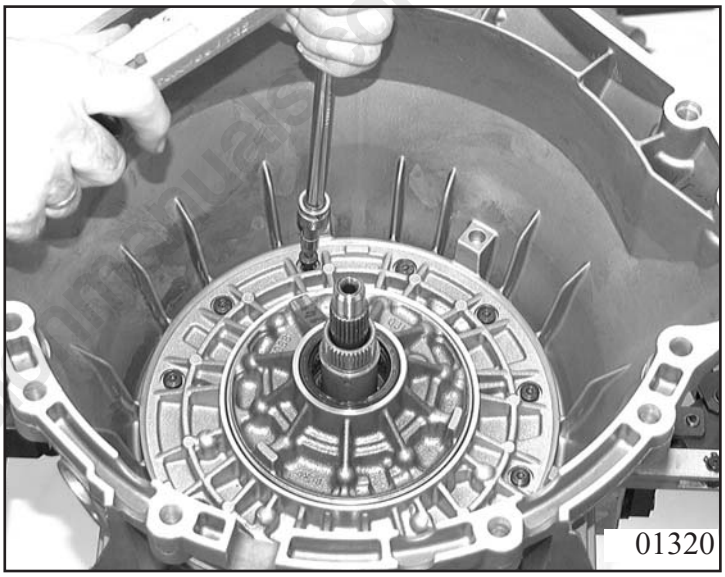

Transmissionmanuals.com

3.7 Mechatronics, oil pan and converter
(Complete mechatronics, see spare parts list, technical cover sheet, item YO2)

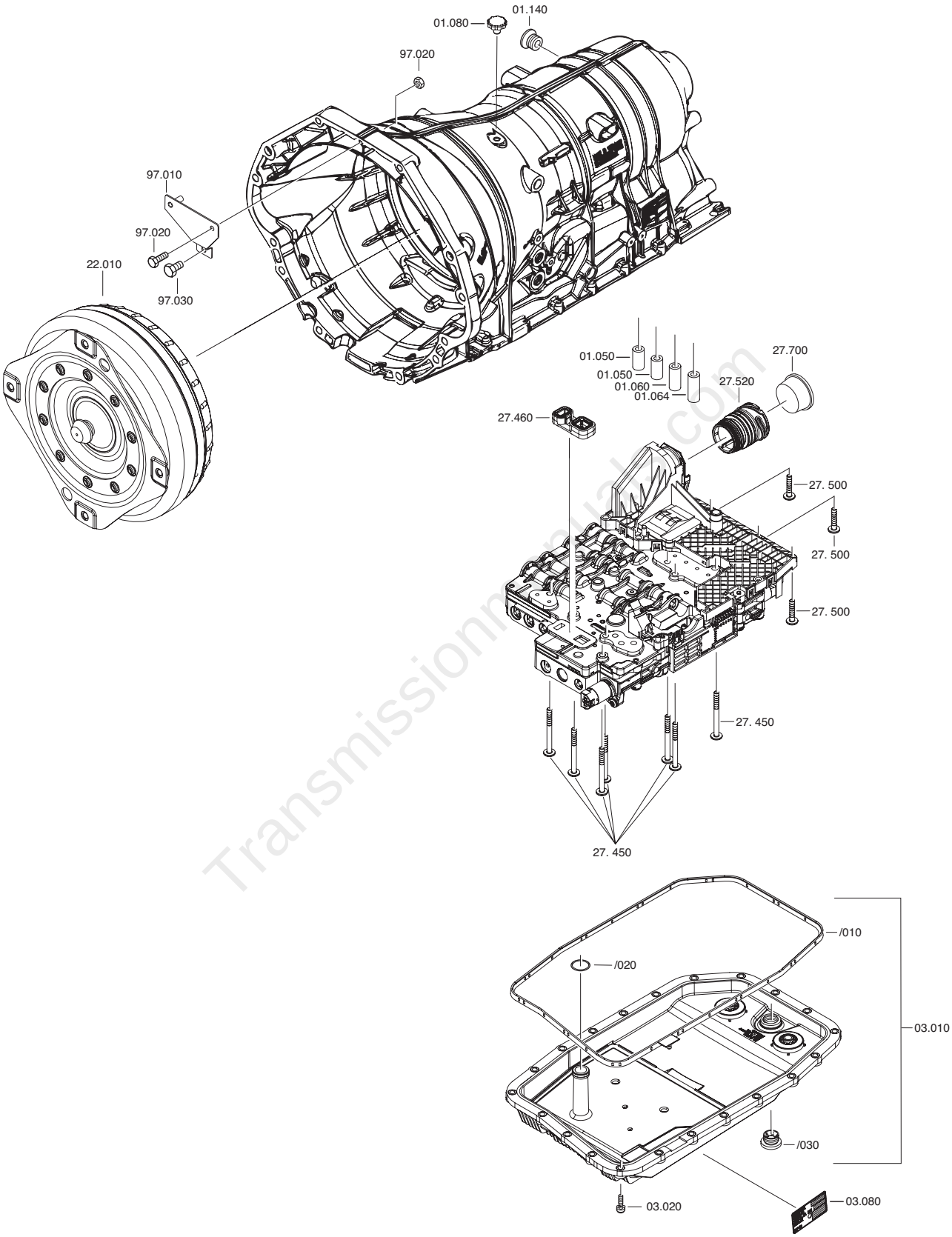

Transmissionmanuals.com

Turn the casing by 90°.
Drive 4 sealing sleeves (2x 01.050, 01.060, 01.064) between the transmission casing and cylinder CD with a suitable tool.

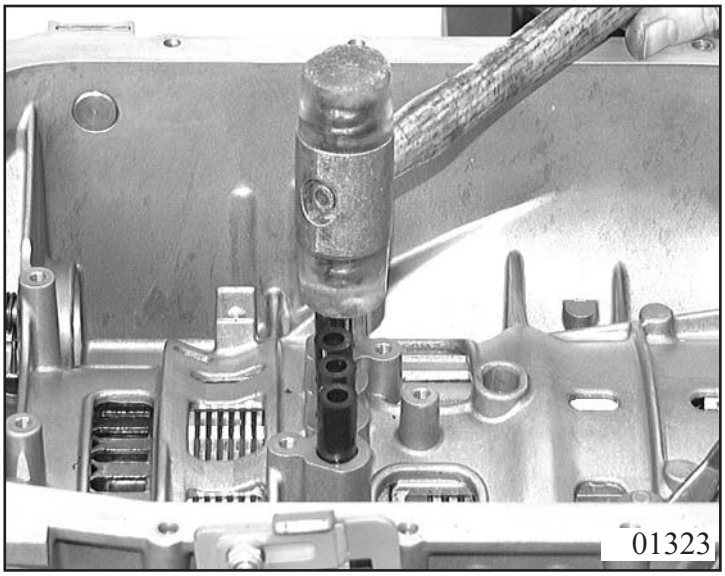

Warning!
Note the correct lengths of the sealing sleeves. All of them must project by the same amount.

Insert sealing element 27.460 into the transmission casing.
Place mechatronics.

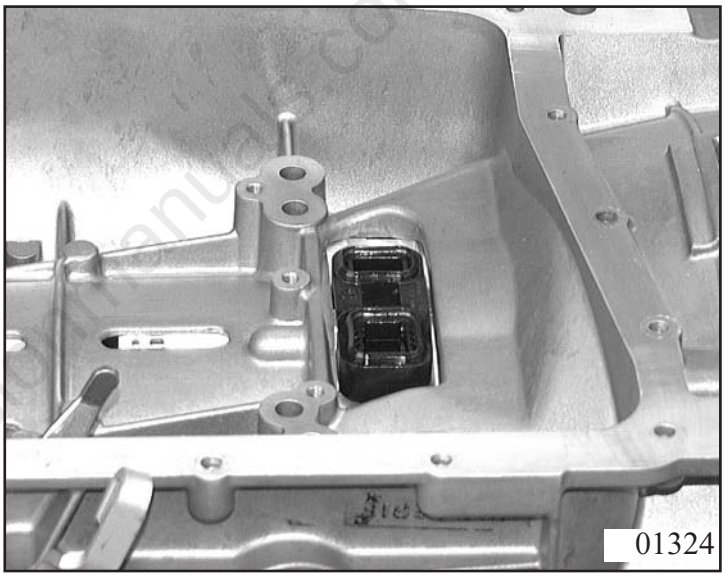

Check all clutches / brakes for proper function by supplying compressed air to the marked bores
(see picture alongside)

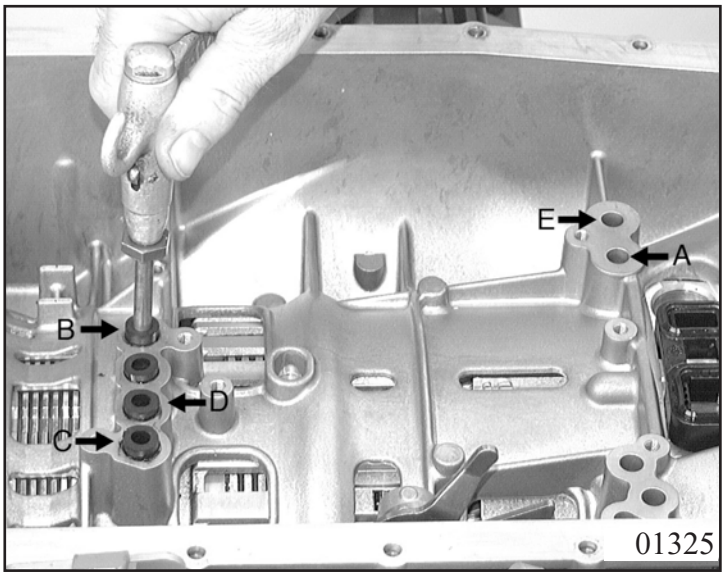

Transmissionmanuals.com

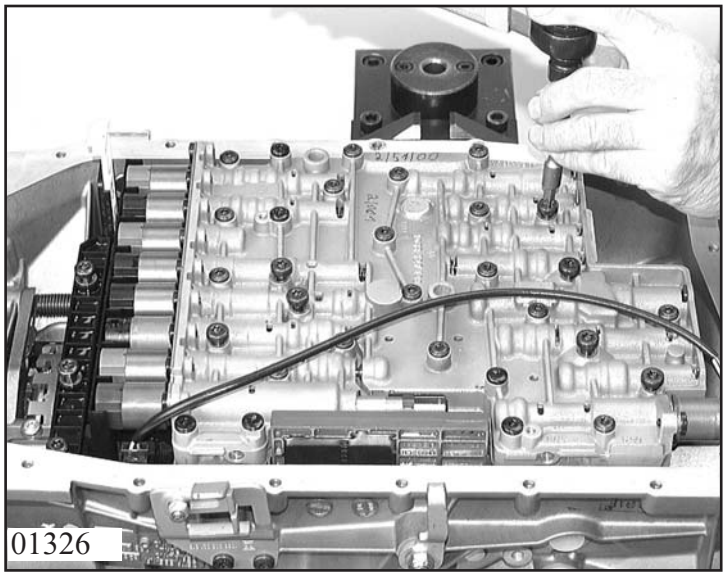

01326

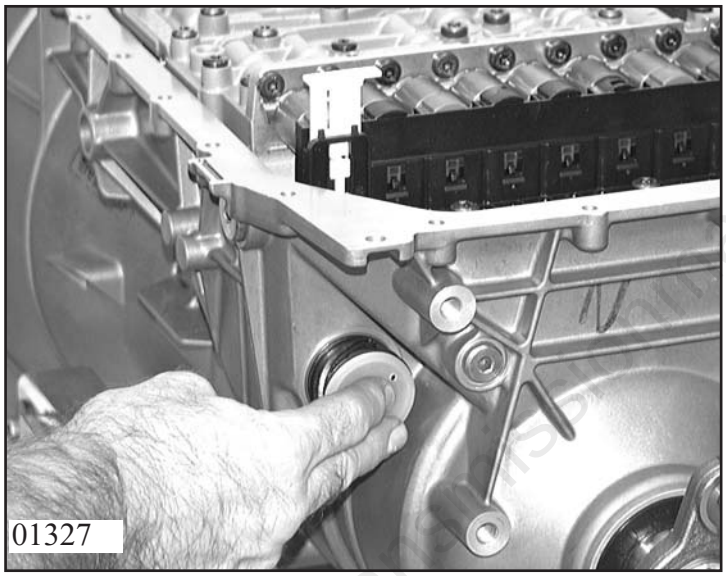

01327

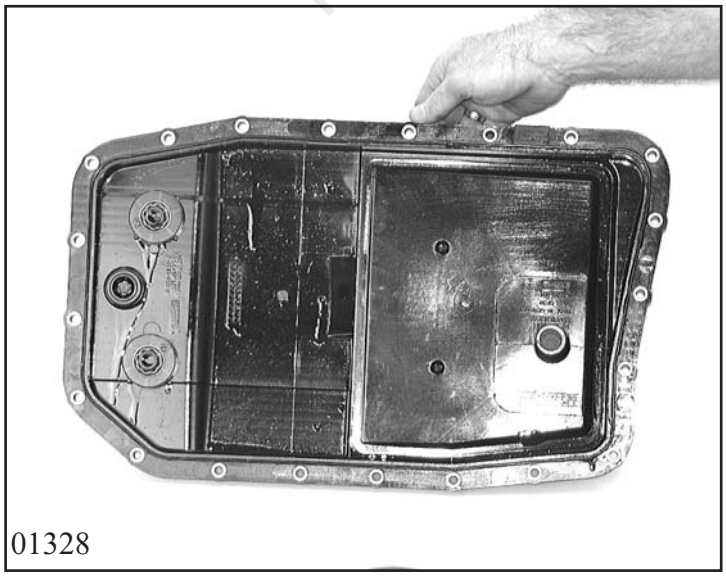

01328

Transmissionmanuals.com

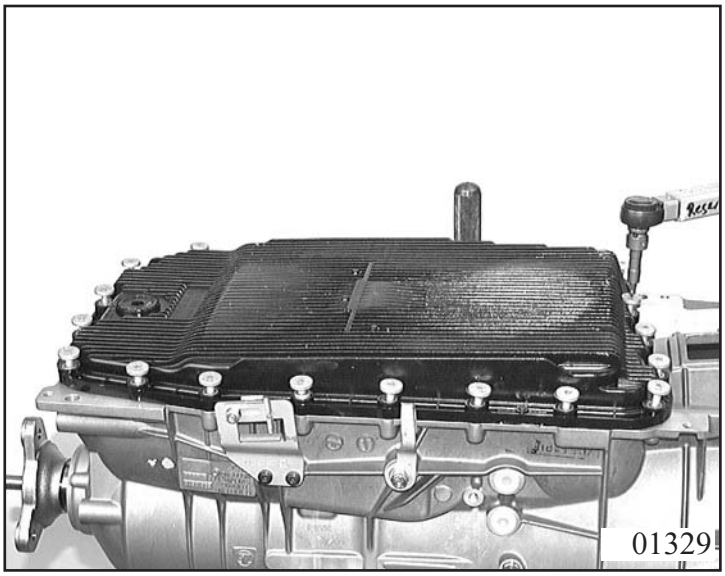



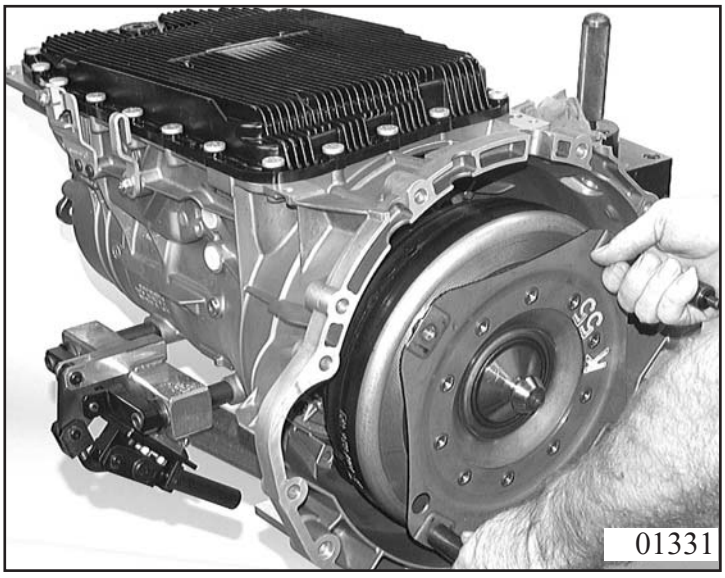

Transmissiontalk.com

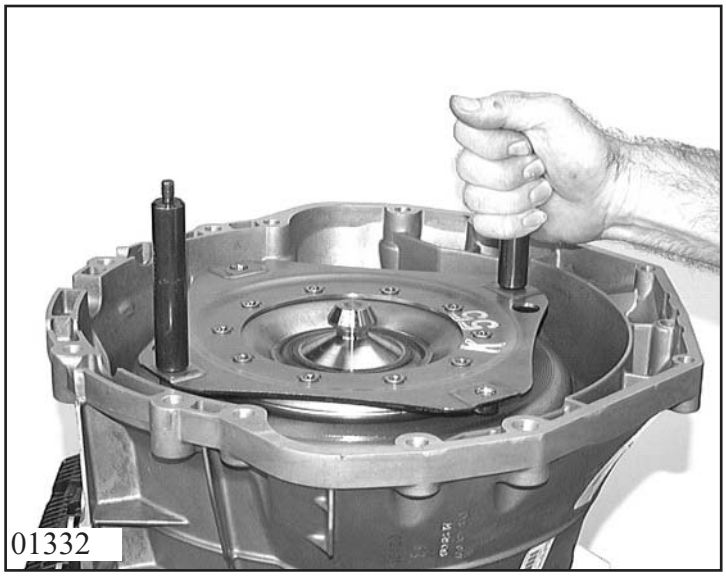
01332

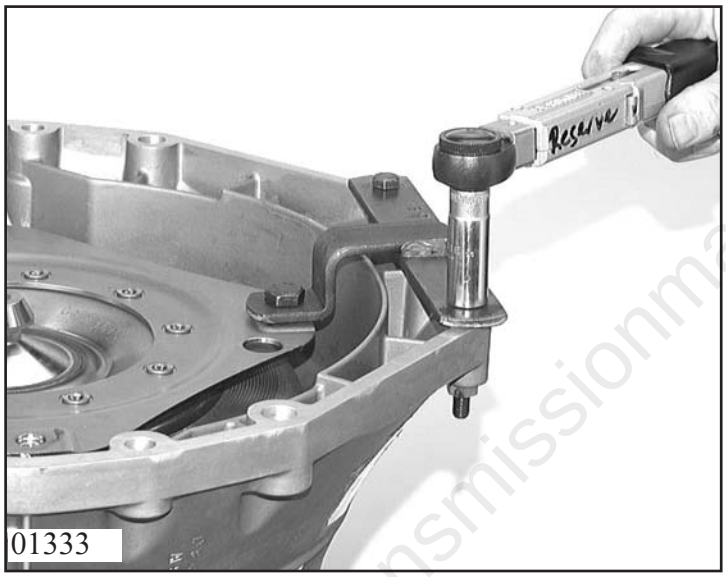

01333

Transmissionmanuals.com

References to possible *mechatronics functional tests* can be found in the relevant trouble-shooting program.

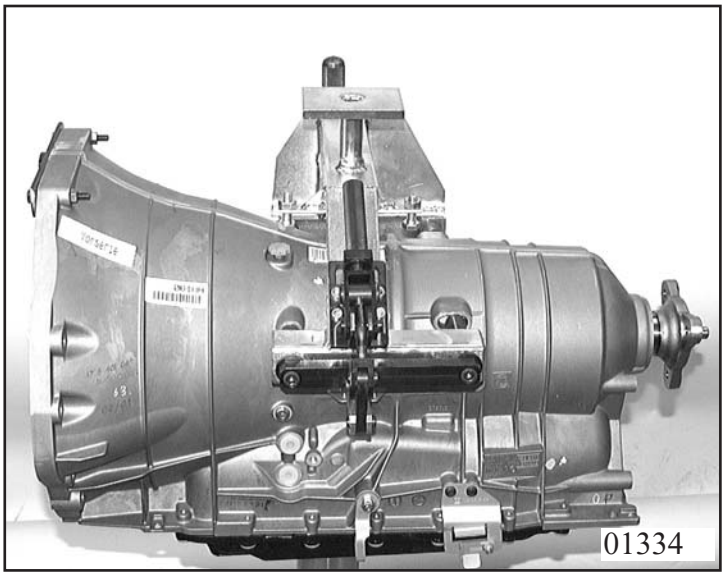

Transmissionmanuals.com